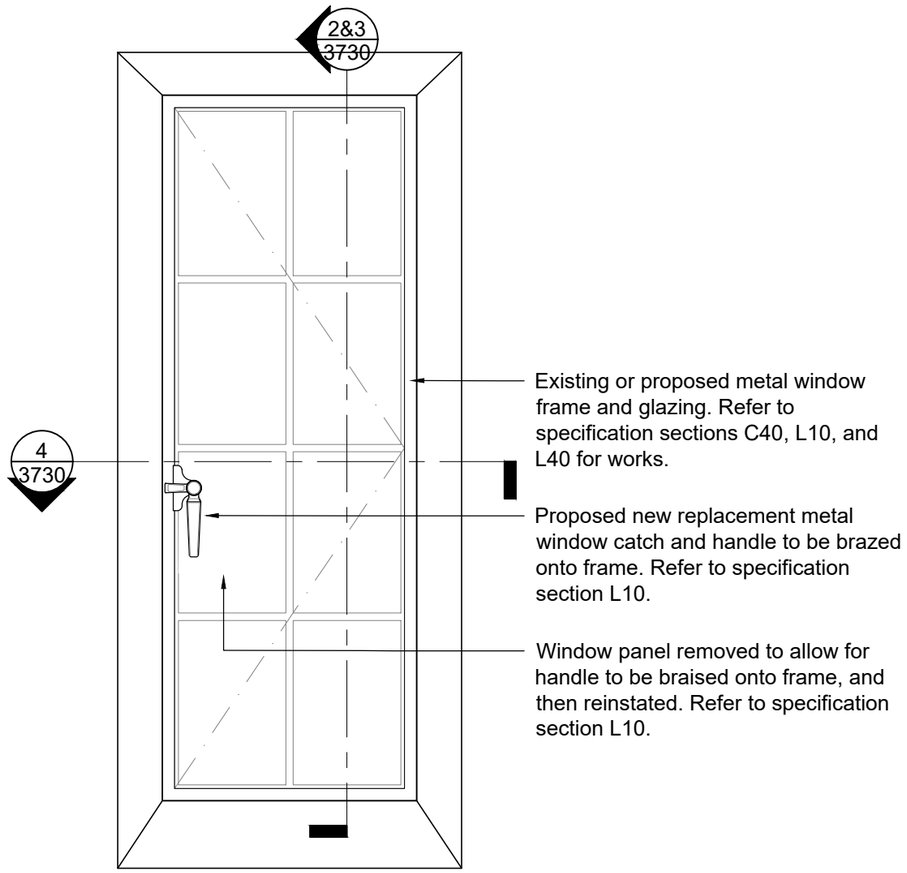

1 / 3730 Typical Metal Framed Window Elevation
1:10 @ A3

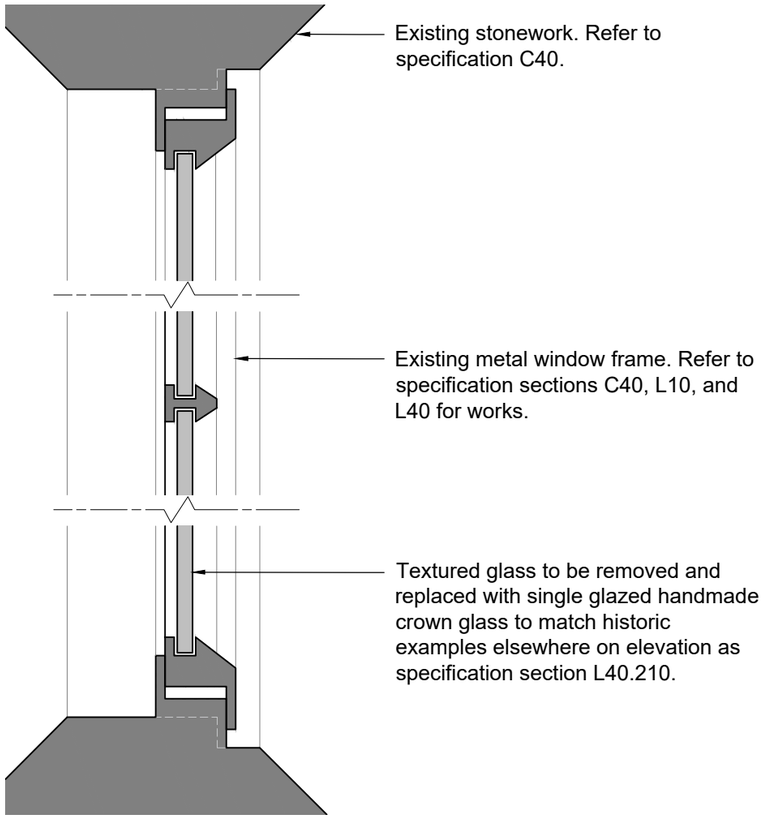

2 / 3730 Retained Metal Framed Casement Window - Generic Section Detail
1:2 @ A3

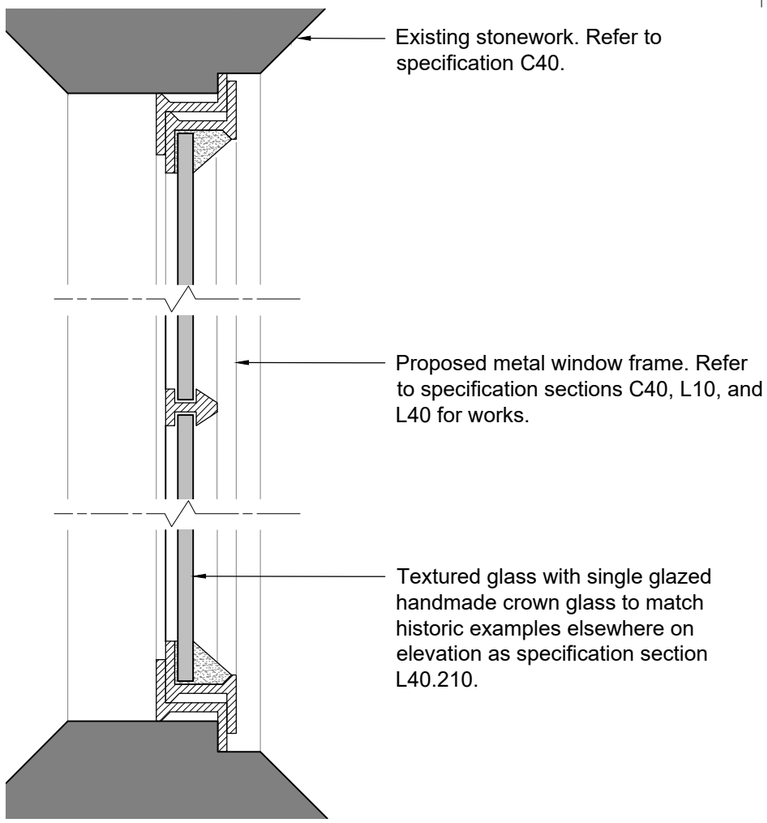

2 / 3730 New Metal Framed Casement Window - Generic Section Detail
1:2 @ A3

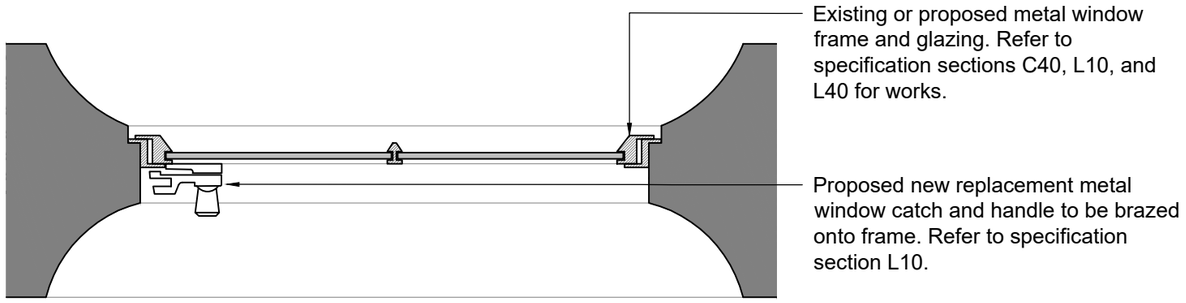

4 / 3730 Typical Metal Framed Window Generic Details - Plan
1:5 @ A3

Notes:

Drawings are based on survey data however any discrepancies. should be notified to Purcell in writing.

Due to the scales used any measurements from this drawing should include an appropriate level of tolerance.
Where appropriate site dimensions should be taken to verify accuracy of measurement.

All dimensions are in millimetres unless noted otherwise.

Purcell shall be notified in writing of any discrepancies.

The digital content in this DWG file is the property of Purcell Architecture Limited and is shared for information only. Do not copy, share, or reuse any part of it without our written permission.

REV	DATE	BY	CHK	DESCRIPTION
P01	17.10.2025	RP	KSH	TENDER DRAFT

CLIENT
Historic Royal Palaces
PROJECT
Tower of London Education Facilities

JOB NUMBER
243442
TITLE
Conservation Repairs & Works
Typical Metal Framed Window Details

SIZE A3L
SCALE 1:20
REV **P01**
SUITABILITY/REASON FOR ISSUE **S4 - FOR APPROVAL**
DRAWING NUMBER
243442-PUR-01-XX-DR-A-3730

PURCELL

PURCELL® IS THE REGISTERED TRADE NAME FOR PURCELL ARCHITECTURE LTD AND ALL SUBSIDIARY COMPANIES AND IS REGISTERED IN THE UNITED KINGDOM, EUROPEAN UNION, HONG KONG, CHINA AND AUSTRALIA.
© PURCELL 2025. www.purcelluk.com